Title: How big is it? Determining the size of objects that are too small

Author(s): Jini John
Date Created: August 5, 2011
Subject: Earth and Environmental Science
Grade Level: 7th grade
Standards: New York State- Intermediate Science (http://www.p12.nysed.gov/ciai/mst/sci/documents/intersci.pdf)
Standard 1-Analysis, Inquiry, and Design
Standard 2-Information Systems
Standard 7-Interdisciplinary Problem Solving

Schedule: Three 40-minute periods

Description:

Students will be able to determine how to measure objects that they can not see with the naked eye (too small). They will also learn how to use the microscope effectively.

Objectives:

- Students will be able to:
- Calculate conversions using the metric system
- Identify the difference between resolution and magnification
- Observe specimens under the light microscope
- Explain how scientists study phenomena that they can not see with the naked eye

Vocabulary:

- Metric system
- Logarithmic scale
- Magnification
- Resolution
- Objective
- All terms on Microscope Identification Sheet

Materials:

- Pencils
- Ruler
- Scale Sorting Cards
- Blank piece of paper
- Microscope Identification Sheet
- Images of various objects in SEM PowerPoint
- Light Microscope
- Eye dropper
- Beaker
- Cotton
- Lens Paper
- Slide
- Water
- Various slides of specimens

Safety:

Students should be careful when using scissors. Students will be in the lab and using microscopes so they should handle themselves appropriately.

Science Content for the Teacher:

This lesson is designed so that students become familiar with the metric system as well as the logarithmic scale. In addition, students need to understand the anatomy of the microscope.

Classroom Procedure:

AIM: To determine the size of objects using the metric system and to learn how to use a light microscope

Do Now: Students would practice making conversions using the metric system:
90 ml = _____ L
36 kg = _____ g
153 m = _____ um

Anticipatory Activity: Students will be shown a PowerPoint of images of various objects but students would have to guess what the objects are

Students will practice using the metric system (from the following day) using the Size sorting activity card taken from Access Nano:

Method

1. Rule a line near the bottom of the paper across its length (landscape)
2. Mark the line at 3 cm intervals (do not label yet)
3. Starting from the left, label above the scale with the size in meters as

   10^{-12}, 10^{-11}, 10^{-10},….10^{0}, 10^{1}
4. Below the scale, mark the positions of these sizes: (You will need to think!)

   1pm, 1amu, 1µm, 1mm, 1cm, 10cm, 1m, 10m
5. Using the **cards provided**, place the following objects at their correct size positions:

Hydrogen atom	10^{-11}m
Water molecule	10^{-10}m
Width of DNA molecule	10^{-9}m
Rhinovirus (common cold)	10^{-8}m
Influenza virus	10^{-7}m
Golden staph bacteria	10^{-6}m
Red blood cell	10^{-5}m
Width of a human hair	10^{-4}m
Flea	10^{-3}m
Five cent coin	10^{-2}m

Baseball	10^{-1}m
Child	10^{0}m
Large truck	10^{1}m

6. Above the cards, use arrows that show the range covered by:

Human vision	10^{-4}m →
Light microscopes	10^{-3}m → 10^{-6}m
Electron microscopes	10^{-4}m → 10^{-9}m
Synchrotron	10^{-3}m → 10^{-12}m
Nanoparticles	10^{-9}m → 10^{-6}m

Questions

1. This is a logarithmic scale. Each division is ten times bigger than the previous one. How is a logarithmic scale different from a normal scale?

2. What types of items are regarded as nanoparticles?

3. Using the internet, find 3 facts about the nano-sized particles

Once they are finished, there would be a quick class summary of what they learned

The next day students would complete the Microscope Lab:

In Lab Q#1) Label the diagram of the microscope (be sure to include this as part of your lab report).

In Lab Q #2) Describe the function of the following parts:

Eyepiece	**Diaphragm**	**Mirror**
Arm		
Objective—Low Power	**Fine Focus**	**Base**
Objective—High Power	**Coarse Focus**	**Stageclips**
Stage	**Nosepiece**	**Body Tube**

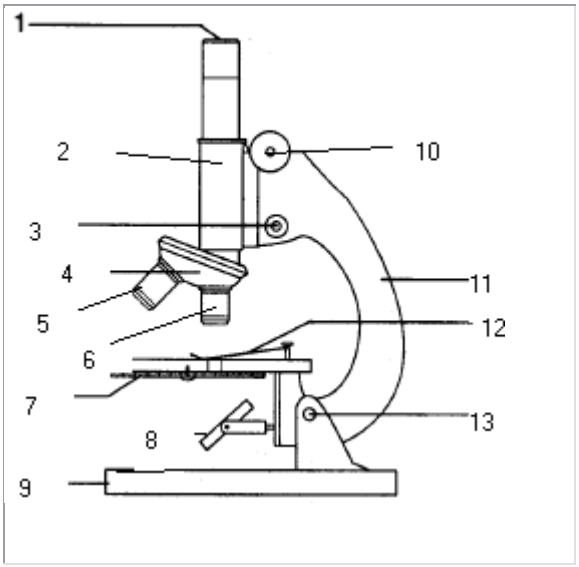

1.
2.
3.
4.
5.
6.
7.
8.
9.
10.
11.
12.
13.

B. Now that you know something about the "anatomy" of a microscope, you are ready to start using it. Turn the nosepiece such that the low power objective lens is over the hole in the stage. Place the slide to be viewed on the stage and center the specimen over the opening. Use the coarse focus knob to slowly raise the lens from the stage while viewing the image. Fine focusing is not needed when using the lowest magnification. When you are using any of the other objectives, it will be necessary to use the fine focus.

Q-1) Calculate the total magnification of each lens by multiplying the number on the eyepiece by the number on the objective (these numbers should have X's next to them).

Magnifcation = Power of the x Power of the

Eyepiece Objective

C. Now look through the eyepiece. If you feel like you are looking into a dark cave, you need adjust the diaphragm to allow more light. If you are having difficulty, raise your hand and your teacher will help you. (The diaphragm will usually need readjustment after changing to a different magnification.

D. Place a few cotton fibers over the hole in the microscope. Focus on these fibers by turning the course adjustment. Remember, you should only focus by moving the stage down!

Q-2) Describe what you see. Note that only a few fibers are in focus at one time! Explain why this is so.

E. You can generally see things better if you look at them on a slide.

Preparing a Wet Mount: Take a clean slide and place a drop of water on it. Then place your specimen (cotton fibers) into the drop. Carefully place a coverslip over the specimen by putting one edge down first and then gradually lowering the other edge. If done correctly, you will have a minimum of air bubbles (If you do get some air bubbles, be sure to examine them under the microscope. Young biologists like yourselves often confuse them with cells!).

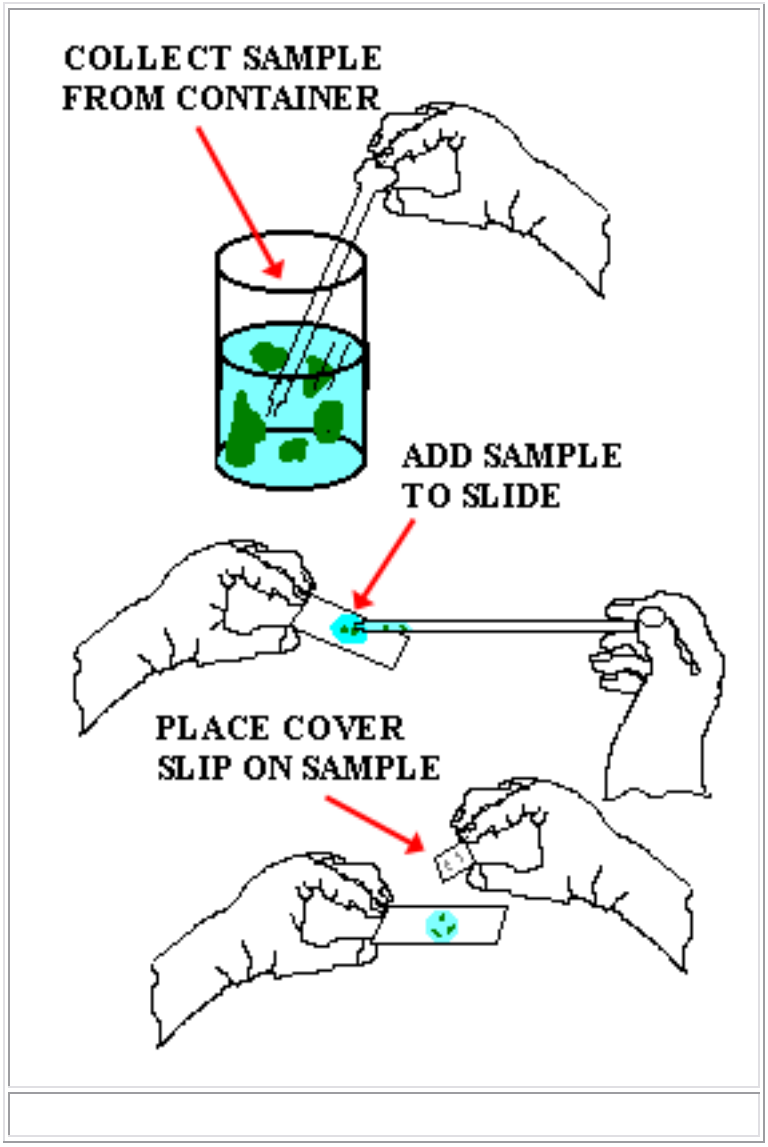

F. Place your wet mount on the stage and examine it under low power.

Q-3) Describe the image seen in the "wet mount" and compare it to the "dry mount."

Make a drawing of the cotton.

This is your first microscope drawing, so here are some reminders:

- Use pencil and unlined (Biofiller) paper– you can shade areas and erase easily; use neat, sharp lines.
- Drawings should always be labeled with the specimen name and magnification.

G. Move the slide gently to the left. To the right. Up. Down.

Q-4) In what direction does it appear to move (compare what you see in your eyepiece with the direction that you actually move the slide)? What does this tell you about the image and orientation of the things which you look at under the microscope?

H. To increase magnification: Microscopes will remain approximately in focus if you change the magnification. You will only need to use the fine focus knobs to slightly adjust the focus. Center the object before switching to a higher power objective. This will help you to locate the object in your field of view. Adjust the diaphragm as necessary.

IMPORTANT: ONLY USE FINE FOCUS KNOB WHEN USING HIGH POWER OBJECTIVE. The object is already roughly focused!!! This procedure should be repeated each time you switch to a higher magnification.

Q-5) When you switch from low power to high power, what happens to the size of the field you see? To the brightness of the field that you see?

Q-6) Why does one only use the fine focus when examining specimens under high power?

I. Look at as many things as you have time for: a piece of cloth, dollar bill, cork, newsprint, yarn, feather, or hair.

Include drawings of each specimen that you examine. (Everyone must have looked at "dry mount" of cotton, wet mount of cotton, "e" and at least 2 other objects.

<u>Research and Analysis</u>

R-1) Describe the orientation of images observed under the light microscope. How would an "e" look under the microscope? Explain in words and draw it.

R-2) Why is it sometimes better to use high power than the low power? Why is it sometimes better to use low power than high power?

R-3) How did the specimens you examined under the microscope today look different from what you would expect by looking at them with your "naked eye"?

R-4) What is the difference between magnification and resolution?

R-5) State at least 2 procedures that should be used to properly handle a light microscope.

R-6) A microscope has a 20X ocular (eyepiece) and two objectives of 10X and 28X respectively.

A) Calculate the low power magnification of this microscope.
B) Calculate the high power magnification of this microscope.
Show your formula and your work.

Assessment:

Students will have answered all of the questions in the Microscope Lab correctly. In addition, the teacher would circulate to make sure any concepts that students were having difficulty with were clarified.

Acknowledgements:

The sorting size activity was taken from Access Nano:

http://www.accessnano.org/teaching-modules/scale-measurement

The "Microscope Lab" was taken from Hunter College High School 7th grade Lab Manual but variations could be found online.

The images using the SEM was taken using the Cornell University CCMR-SEM Microscopy Facility but similar images could be found online.